CACHE PVC

HAWA

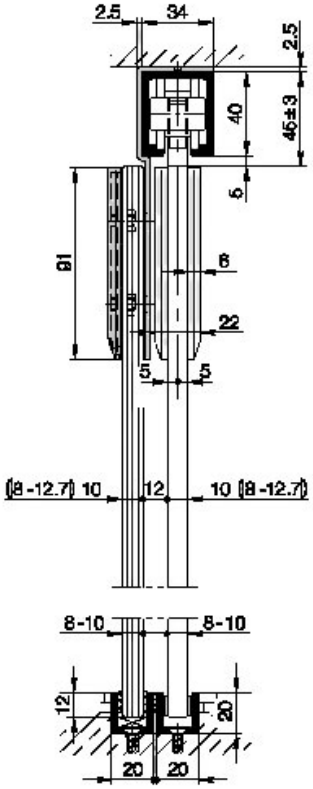

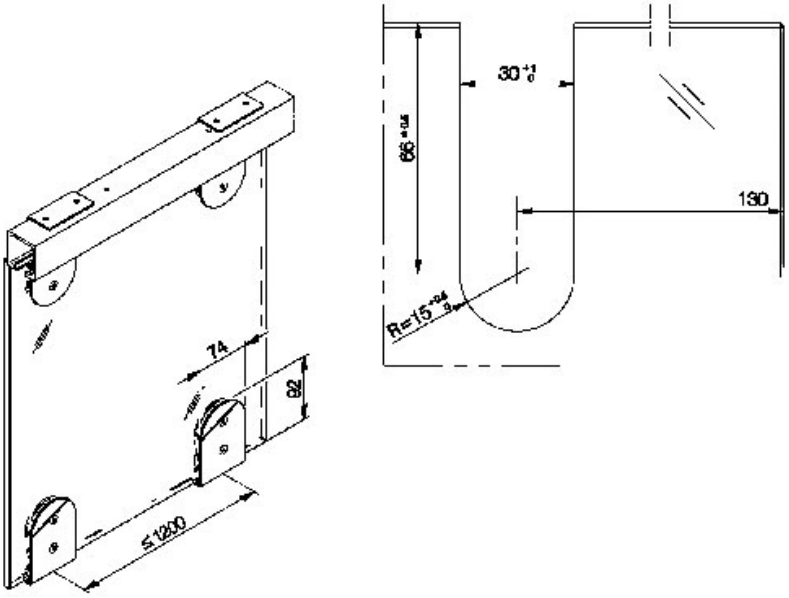
30
130
74
92
≤1200

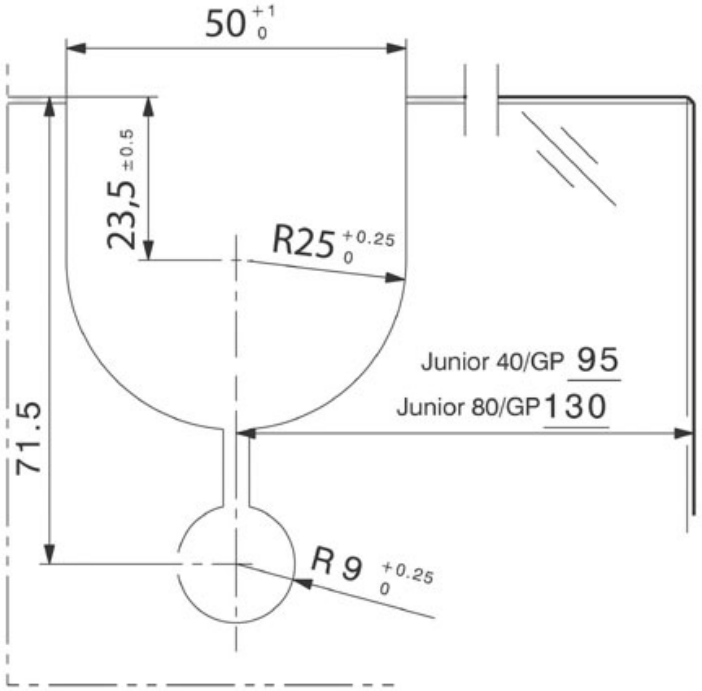
50 +1 0
23,5 ±0.5
R25 +0.25 0
Junior 40/GP 95
Junior 80/GP 130
71.5
R 9 +0.25 0